Seal-Connect®
Electrical Connector Catalog

SINGLE-PIN | PERFORATING GUN TOOL | COAX
MULTI-PIN | KTK-STYLE | ROTATABLES | WET STAB
CONTACT BLOCK | BOOT KIT

BEGIN >

Table of Contents

This interactive document enables easy access to the information you want. Click on a section in the list below to jump to that page.

Why Seal-Connect®	3
Single-Pin	5
Perforating Gun Tool Connectors	6
Coax	7
Multi-Pin Connectors	8
KTK-Style Connectors	9
Rotatables	10
Wet Stab Connectors	11
Contact Blocks	13
Boot Kits	14

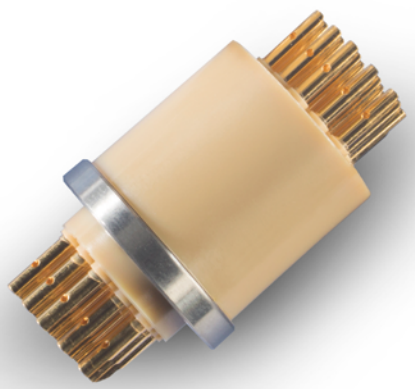

Why Seal-Connect®

Greene Tweed's Seal-Connect® product line has evolved over 30 years of experience, partnering with the largest oil field service companies in the world to maximize downhole reliability.

Seal-Connect® products move electrical signals while maintaining a seal in upstream operations, such as drilling, completions, and production. Greene Tweed pioneered the Seal-Connect® product line for the oil industry, and our connectors are in wide use with major oilfield service companies. When uptime matters, our customers trust Greene Tweed for our high-quality electrical connectors manufactured from our best-in-class materials for reliable and consistent performance in critical applications.

Our Seal-Connect® solutions ensure measurement accuracy and maintain signal integrity during critical operations in challenging environments, even as operating parameters become more extreme. Seal-Connect® pressure-rated electrical connectors are rated to 232°C (450°F) and up to 35,000 psi, with specialized designs for 260°C (500°F) and 45,000 psi.

Our portfolio of Seal-Connect® solutions has been developed over decades in collaboration with equipment manufacturers, service providers, and operators. During our long history of research and development, we have commercialized hundreds of unique solutions leveraging elastomeric and thermoplastic materials and have been granted more than 80 U.S. and foreign patents.

Greene Tweed pioneered the use of PEEK with its Arlon® family of materials to overcome the inherent weaknesses in glass-to-metal connectors. Our Advanced Technology Group focuses on new material development, and the team includes PhDs in diverse disciplines such as Polymer Science, Chemistry, Mechanical Engineering, and Coatings. We have in-house testing capabilities for material characterization, fluid aging, rapid gas decompression (RGD), high-pressure high-temperature (HPHT) cycling, vibration, and more. We rigorously batch test our raw materials at our ISO 17025-certified materials lab before we manufacture those materials at our ISO 9001-accredited facilities, using industry-leading compression and injection-molding capabilities. All of our products must pass strict quality inspection criteria prior to shipping. Our applications engineering team has experience designing equipment at OEMs and service companies in the industries we serve.

Greene Tweed engineers understand the needs of the energy industry, as well as the capability of our materials in a wide range of operating environments. We collaborate with our customers to select and provide the best solution for the application to keep operations running safely and reliably.

Seal-Connect Solutions

Compound	Material	Features	
Arlon® 1000	Virgin PEEK	• Excellent chemical compatibility • Application temperatures up to 400° F	• Strong electrical resistance • Net molded or machined forms available • Filled PEEK and PEK grades available
Arlon® 2000	Virgin PEK	• Good chemical compatibility • Application temperatures up to 450° F	
Arlon® 3000XT	Cross-linked PEEK	• Proprietary cross-linked formula for enhanced HPHT performance • Application temperatures up to 500° F • Excellent chemical compatibility	

Standard Component Details	
Contact Material	BeCu UNS C17200 or C17300
Contact Plating	AMS 2422 gold plating over nickel
Washer Material (optional)	Stainless steel

Other materials and coatings available

Part Numbering System

EC XX – XX XXXX X X – 00 X

Series Designator: EC

FOR GT INTERNAL USE ONLY

Product

SP **Single-Pin –** Pressure-rated electrical connector containing one contact pin (e.g., feedthrough, bulkhead)

MP **Multi-Pin –** Pressure-rated electrical connector containing two or more contact pins (e.g., bulkhead)

CX **Multi-Axis (Coax/Triax) –** Connector with two or more contacts sharing the same axis through the length of the body

RT **Rotatable –** Connector with two or more contacts sharing the same axis ending in various terminations: wire, bulkhead, etc.

WS **Wet Stab –** Pressure rated connector capable of being mated and performing in wet environments

PG **Perforating Gun –** Pressure rated connector intended for use as igniters in perforating gun tools

CB **Contact Block –** Non-pressure-rated connector

KT **Boot Kits –** Elastomer boot jacket containing an electrical connector

Outside Diameter

Diameter (inches) to three decimal places

ZZZZ 10 inches or larger

Examples:

1250 = 1.250”

ZZZZ = 12.750”

Contacts

Number of contacts, channels, or wires

00 None, or not applicable

Examples:

01 = Single-pin

02 = 2-channel coax

00 = Contact block with no pins

Standard Part Number Table Guide

Product details include the outer diameter, length, maximum temperature and pressure, number of contacts, mating part number, terminations, and material. All temperatures are listed in Fahrenheit and all pressures are listed in ksi. All dimensions are listed in inches.

Below are termination types referred to in the standard part number tables.

PIN rounded contact pin

CUP solder cup

SKT socket contact

PG pigtail wire

F, M female, male (for Rotatables)

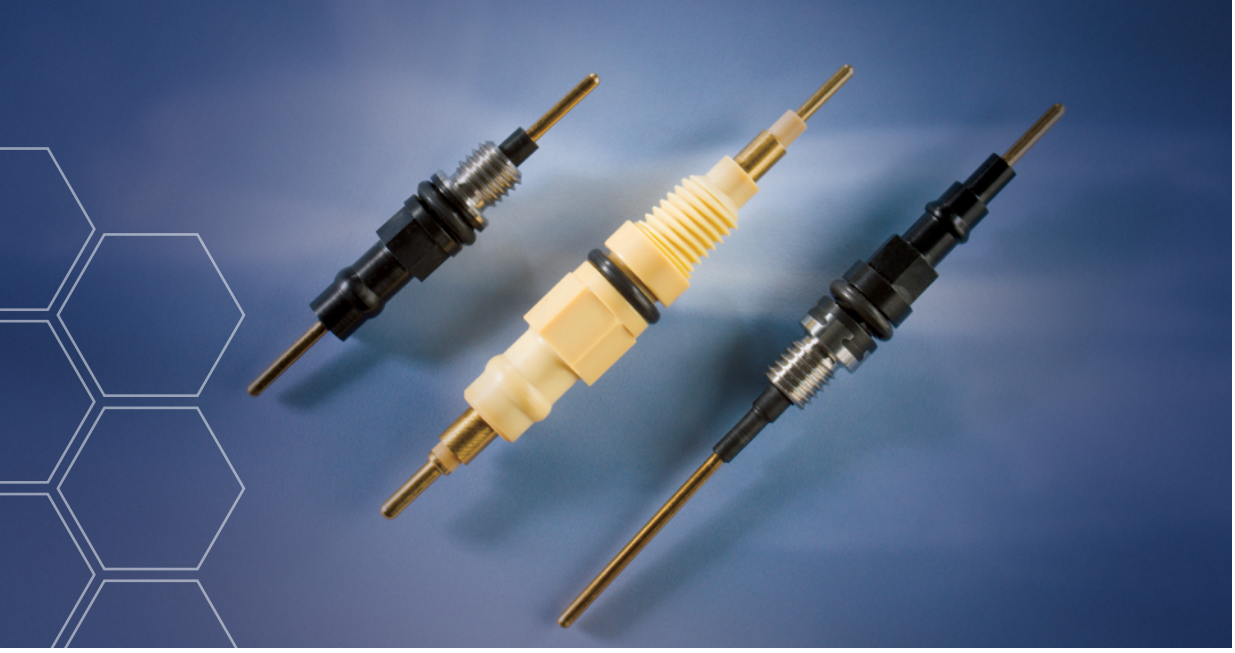

Single-Pin

Perforating Gun Tool Connectors

Coax

Multi-Pin Connectors

KTK-Style Connectors

Rotatables

Wet Stab Connectors

Contact Blocks

Boot Kits

Single-Pin

Single-pin Seal-Connect® designs provide secure, reliable power and signal transmission in rugged environments. They are most commonly offered in Arlon® 2000 or 3000 XT materials, with copper alloy contacts, unless otherwise specified. Our Greene Tweed connectors can operate in environments to 35,000 psi and 260°C (500°F). We offer hundreds of single-pin designs with a variety of termination options, which can be engineered to match customer specifications or purchased from existing designs.

Standard Single-Pin Connectors

Below are a sample of the most common single pin connectors available and currently in stock. Greene Tweed has an expansive catalog of standard single-pin connector offerings not listed below, as well as custom connectors to fit any application.

PART NO.	OD (in.)	LENGTH (in.)	MAX TEMPERATURE (°F)	MAX PRESSURE (ksi)	NO. OF CONTACTS	TERMINATIONS				ARLON® MATERIAL	MATES WITH
ECSP-010233H3-0001	0.233	1.840	400	25	1	#16	PIN	#16	PIN	2000	ECKT-010250L3-0001
ECSP-010233L3-0001	0.233	1.840	400	25	1	#16	PIN	#20	CUP	2000	ECKT-010250L3-0001
ECSP-010310L2-0001	0.310	1.930	400	20	1	#16	PIN	#22	CUP	2000	ECKT-010310L2-0001
ECSP-010310L2-0002	0.310	1.950	400	20	1	#16	PIN	#16	PIN	2000	ECKT-010310L2-0001
ECSP-010310L4-0001	0.310	1.931	400	35	1	#16	PIN	#16	PIN	3000XT	ECKT-010310L2-0001

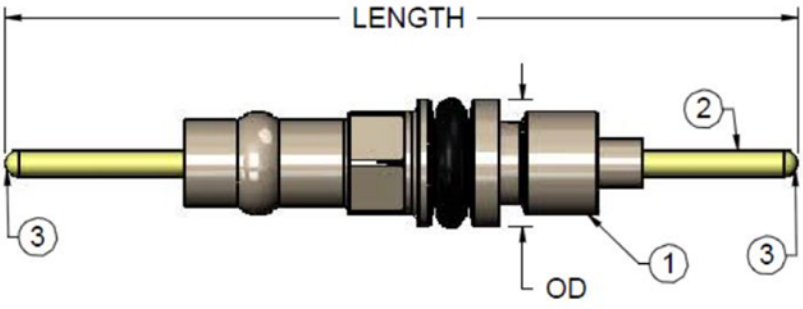

ITEM NO.	DESCRIPTION
1	Body
2	Contact
3	Termination

Single-Pin

Perforating Gun Tool Connectors

Coax

Multi-Pin Connectors

KTK-Style Connectors

Rotatables

Wet Stab Connectors

Contact Blocks

Boot Kits

Perforating Gun Tool Connectors

Greene Tweed understands these high volume, consumable applications that experience high temperature, high pressures, harsh media, sour gas, extreme shock, and vibration. As a result, Greene Tweed has developed cutting edge manufacturing techniques to offer economical solutions for perforating gun and other high volume applications. The Seal-Connect® brand has vast experience in these environments and includes an extensive electrical portfolio engineered for the world's toughest environments.

Standard Perforating Gun Tool Connectors

Below are a sample of the most common perforating gun tool connectors available and currently in stock. Greene Tweed has an expansive catalog of standard perforating gun tool connectors offerings not listed below, as well as custom connectors to fit any application.

PART NO.	OD (in.)	LENGTH (in.)	MAX TEMPERATURE (°F)	MAX PRESSURE (ksi)	NO. OF CONTACTS	TERMINATIONS	ARLON® MATERIAL
ECPG-010374L1-0000	0.558	2.375	350	20	1	.096 pin x .090 pin	1000
ECPG-010376L1-0000	0.376	0.506	350	20	1	.185 pin x .195 pin	1000
ECPG-030623L2-0000	0.623	0.670	350	20	3	.123 cup x .058 flat pin	2000

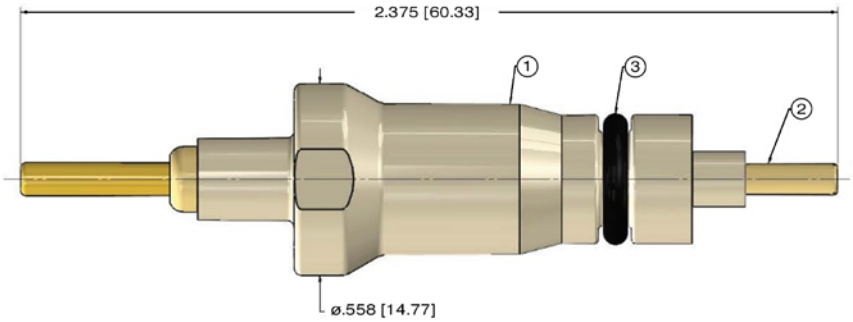

ECPG-010374L1-0000	
ITEM NO.	DESCRIPTION
1	Body
2	Contact
3	Seal

Single-Pin
Perforating Gun Tool Connectors
Coax
Multi-Pin Connectors
KTK-Style Connectors
Rotatables
Wet Stab Connectors
Contact Blocks
Boot Kits

Coax

Standard Coax Connectors

Below are a sample of the most common coax connectors available and currently in stock. Greene Tweed has an expansive catalog of standard coax connector offerings not listed below, as well as custom connectors to fit any application

PART NO.	OD (in.)	LENGTH (in.)	MAX TEMPERATURE (°F)	MAX PRESSURE (ksi)	NO. OF CONTACTS	TERMINATIONS				ARLON® MATERIAL	MATES WITH
ECCX-020263L0-0001	0.263	1.250	400	N/A	2	#14	SKT	#24	PG	1000	ECCX-020373L2-0001
ECCX-020310L0-0001	0.310	1.250	400	N/A	2	#14	SKT	#24	PG	1000	ECCX-020373L2-0001
ECCX-020373L2-0001	0.373	2.667	400	20	2	#14	PIN	#16	PIN	2000	ECCX-020263L0-0001 ECCX-020310L0-0001

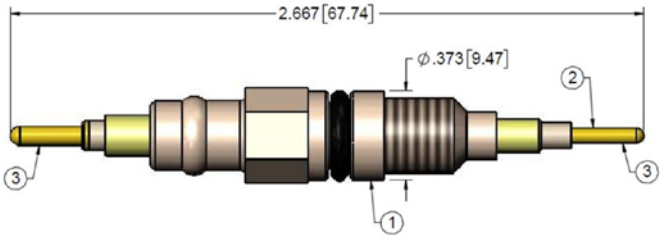

ECCX-020373L2-0001	
ITEM NO.	DESCRIPTION
1	Body
2	Contact
3	Termination

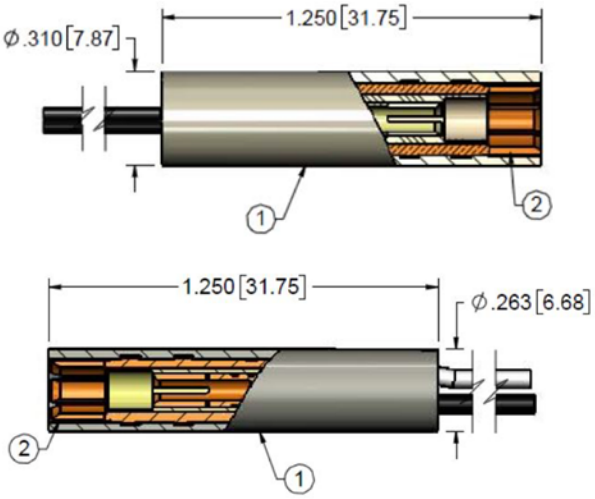

ECCX-020310L0-0001 & ECCX-020263L0-0001	
ITEM NO.	DESCRIPTION
1	Body
2	Contact

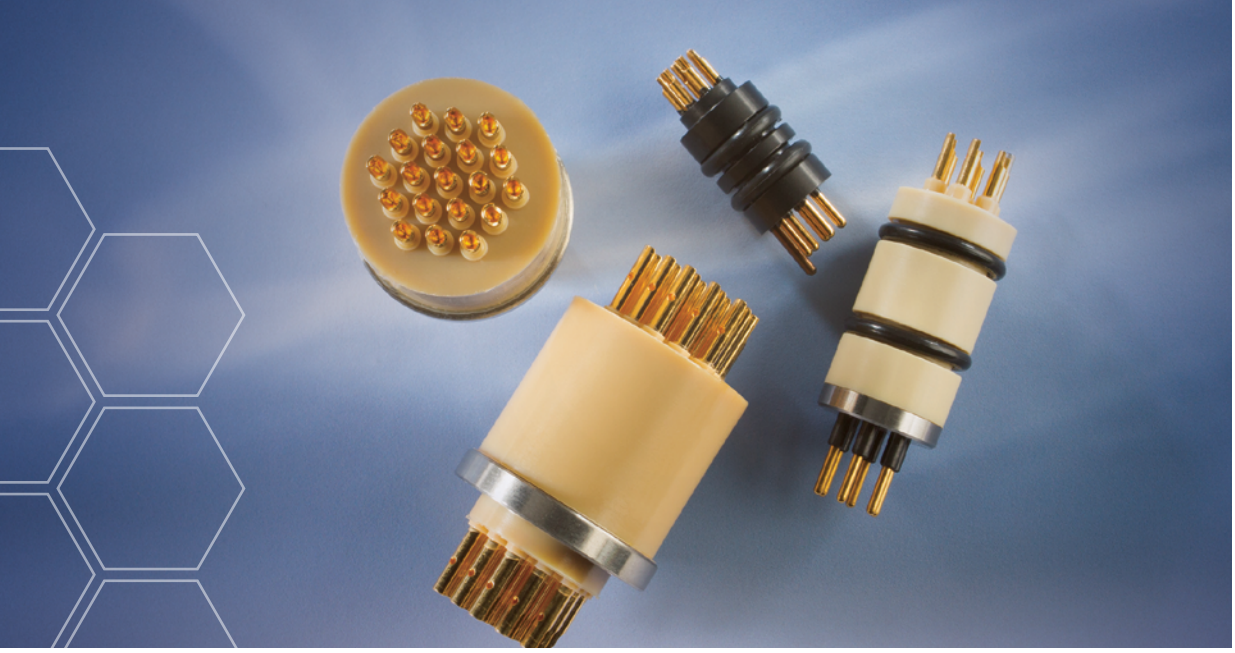

Single-Pin
Perforating Gun Tool Connectors
Coax
Multi-Pin Connectors
KTK-Style Connectors
Rotatables
Wet Stab Connectors
Contact Blocks
Boot Kits

Multi-Pin Connectors

Seal-Connect® multi-pin connectors are injection-molded and designed to maximize electrical reliability and withstand continuous conditions up to 35,000 psi and 232°C (450°F). Multi-pin connectors are available in a variety of body types and pin counts, including bidirectional and bootable connectors. Our engineers can custom design a solution to meet your specific needs. Filled grades of Arlon® are also available.

Standard Multi-Pin Connectors

Below are a sample of the most common multi-pin connectors available and currently in stock. Greene Tweed has an expansive catalog of standard multi-pin connector offerings not listed below, as well as custom connectors to fit any application.

PART NO.	OD (in.)	LENGTH (in.)	MAX TEMPERATURE (°F)	MAX PRESSURE (ksi)	NO. OF CONTACTS	TERMINATIONS				ARLON® MATERIAL	MATES WITH
ECMP-020373L2-0001	0.373	1.220	400	20	2	#24	CUP	#24	CUP	3000XT	
ECMP-030373L2-0001	0.373	0.935	400	20	3	#24	CUP	#24	CUP	3000XT	
ECMP-030373L2-0002	0.373	0.935	400	20	3	#20	PIN	#24	CUP	3000XT	ECCB-030370L0-0001
ECMP-040373L2-0001	0.373	1.035	400	20	4	#26	CUP	#26	CUP	3000XT	
ECMP-040498L2-0001	0.498	1.270	400	20	4	#22	CUP	#22	CUP	2000	
ECMP-050498L3-0001	0.498	1.936	350	25	5	#16	PIN	#16	PIN	2000	ECCB-050410L0-0001
ECMP-060498L3-0001	0.498	1.160	400	25	6	#16	PIN	#20	CUP	2000	ECCB-060525L0-0001
ECMP-060498L3-0002	0.498	1.271	400	25	6	#16	PIN	#16	PIN	2000	ECCB-060498L0-0001
ECMP-080373L2-0001	0.373	0.935	400	20	8	#20	CUP	#20	CUP	3000XT	ECCB-080498L0-0001
ECMP-080498L2-0001	0.498	1.130	350	20	8	#18	PIN	#24	CUP	2000	
ECMP-120685L4-0001	0.685	1.110	350	30	12	#24	CUP	#24	CUP	2000	
ECMP-120685L3-0001	0.685	1.561	400	25	12	#20	CUP	#18	PIN	2000	ECCB-120688L0-0001

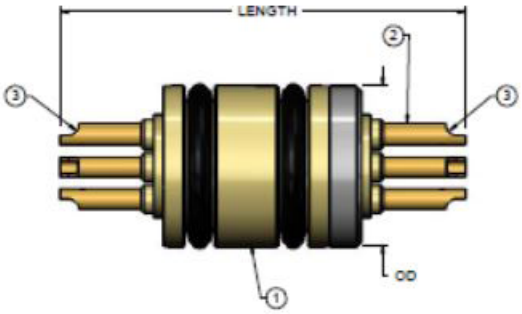

ITEM NO.	DESCRIPTION
1	Body
2	Contact
3	Termination

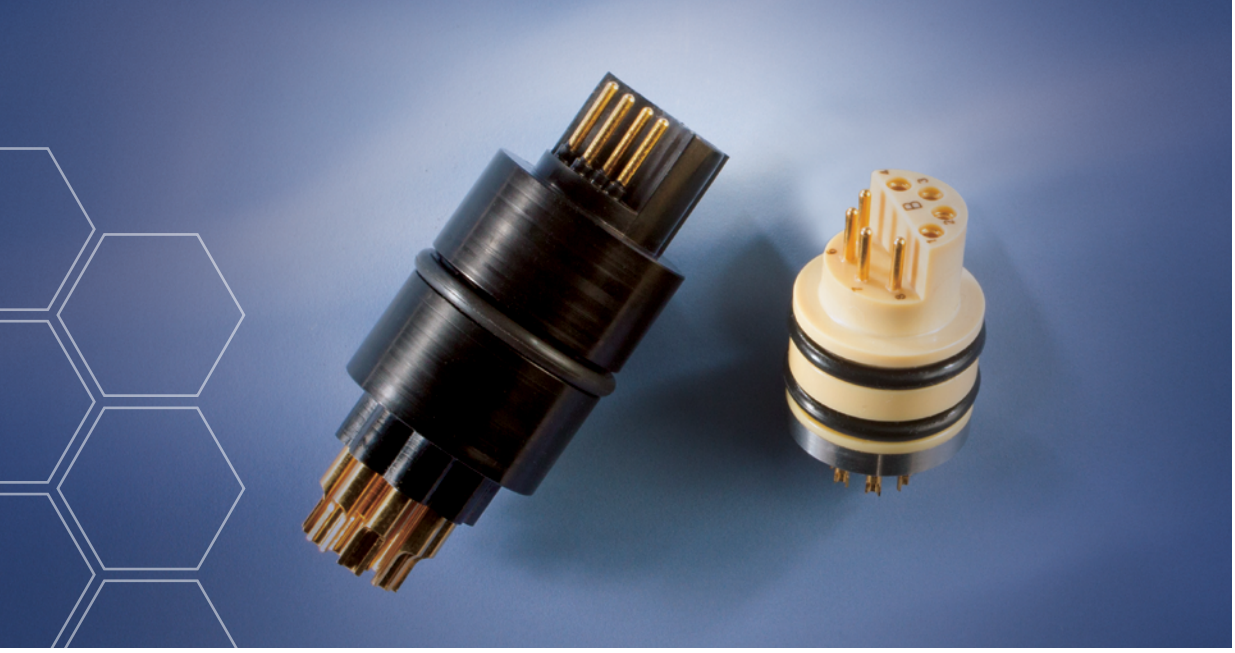

Single-Pin
Perforating Gun Tool Connectors
Coax
Multi-Pin Connectors
KTK-Style Connectors
Rotatables
Wet Stab Connectors
Contact Blocks
Boot Kits

KTK-Style Connectors

KTK-style connectors have mating surfaces with both male and female contacts that are mated into identical opposite fittings for a keyed (fail-proof) installation. Our KTK-style connectors are rated to 400°F and 20,000 psi. Multiple pin counts are available on request.

Standard KTK-Style Multi-Pin Connectors

Below are a sample of the most common KTK, hermaphroditic style multi-pin connectors available and currently in stock. Our standard KTK-style solutions are intermatable with most other standard KTK-style connectors. Greene Tweed has an expansive catalog of standard KTK, hermaphroditic style multi-pin connector offerings not listed below, as well as custom connectors to fit any application.

PART NO.	OD (in.)	LENGTH (in.)	MAX TEMPERATURE (°F)	MAX PRESSURE (ksi)	NO. OF CONTACTS	TERMINATIONS				ARLON® MATERIAL	MATES WITH
ECMP-100748L2-0003	0.748	1.580	400	20	10	#22	CUP	#22	CUP	2000	
ECMP-100748L2-0001	0.748	1.795	400	20	10	#20/#20	PIN/SKT	#20	CUP	2000	ECMP-100748L2-0002
ECMP-100748L2-0002	0.748	1.795	400	20	10	#20/#20	PIN/SKT	#20	CUP	2000	ECMP-100748L2-0001

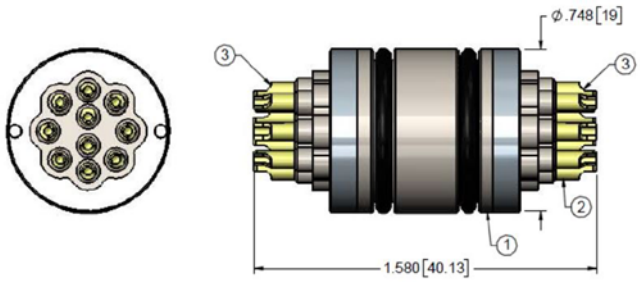

ECMP-100748L2-0003

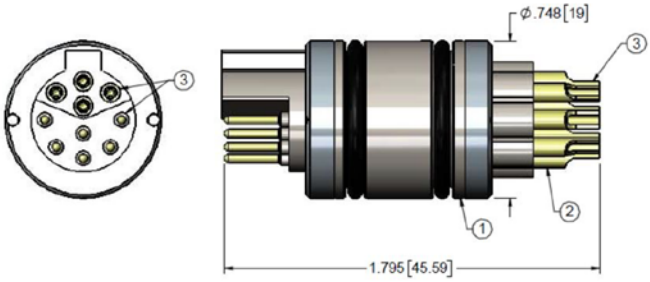

ECMP-100748L2-0001

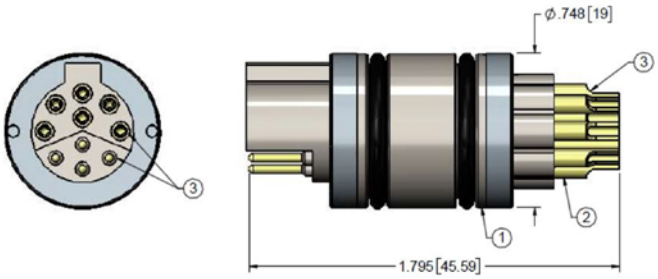

ECMP-100748L2-0002

ITEM NO.	DESCRIPTION
1	Body
2	Contact
3	Termination

Single-Pin
Perforating Gun Tool Connectors
Coax
Multi-Pin Connectors
KTK-Style Connectors
Rotatables
Wet Stab Connectors
Contact Blocks
Boot Kits

Rotatables

Greene Tweed pioneered the use of PEEK-based rotatable connectors for downhole drilling applications. Today, we continue to offer standard and custom designs backed by decades of materials and application knowledge and validated by extensive field use.

Rotatable connectors are used at the threaded joint on downhole tool strings and work as a swivel connection as they mate. Greene Tweed's rotatables offer superior corrosion resistance when exposed to wellbore fluids, including drilling mud, and can be integrated with bulkhead connectors to protect the electronics behind them.

Both male and female rotatable connectors are available with temperature capabilities to 232°C (450°F) and pressure ratings to 35,000 psi, with combined use of an integrated bulkhead connector. We offer rotatable connectors in standard designs with up to 10 contact bands. Specialized designs of 11 to 13 contact bands can be engineered upon request.

Standard Rotatables

Below are a sample of the most common rotatable connectors available and currently in stock. Greene Tweed has an expansive catalog of standard rotatable connector offerings not listed below, as well as custom connectors to fit any application.

PART NO.	DIA (in.)	LENGTH (in.)	MAX TEMPERATURE (°F)	MAX PRESSURE (ksi)	NO. OF CONTACTS	TERMINATIONS			ARLON® MATERIAL	MATES WITH
ECRT-040475L0-0001	0.475	1.300	400	N/A	4	F	#24	PG	1000	ECRT-040471L0-0001
ECRT-040471L0-0001	0.471	1.884	400	N/A	4	M	#24	PG	1000	ECRT-040475L0-0001
ECRT-070475L0-0001	0.475	2.410	200	N/A	7	F	#24	PG	1000	ECRT-070471L0-0001
ECRT-070471L0-0001	0.471	2.433	200	N/A	7	M	#24	PG	1000	ECRT-070475L0-0001
ECRT-080475L0-0001	0.475	2.990	400	N/A	8	F	#24	CUP	1000	ECRT-080470L0-0001
ECRT-080470L0-0001	0.470	3.297	400	N/A	8	M	#24	PG	1000	ECRT-080475L0-0001
ECRT-100760L0-0001	0.760	4.505	300	N/A	10	F	#22/#24	PG	1000	ECRT-100750L0-0001
ECRT-100750L0-0001	0.750	3.820	300	N/A	10	M	#22	PG	1000	ECRT-100760L0-0001
ECRT-100760L2-0001	0.760	4.435	400	20	10	F	#18	CUP	2000	ECRT-100750L0-0002
ECRT-100750L0-0002	0.750	3.820	400	N/A	10	M	#18/#24	PG	1000	ECRT-100760L2-0001

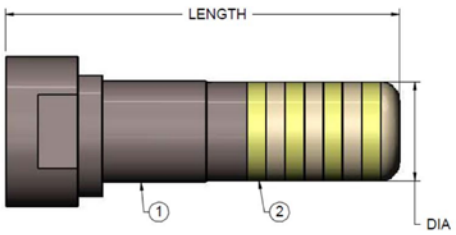

Male Rotatable

ITEM NO.	DESCRIPTION
1	Body
2	Contact Bands

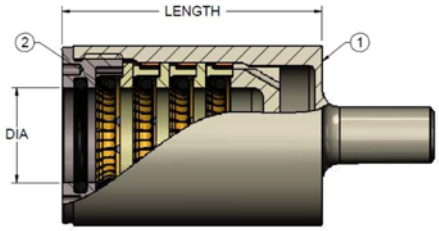

Female Rotatable

ITEM NO.	DESCRIPTION
1	Body
2	Contact Rings

Single-Pin
Perforating Gun Tool Connectors
Coax
Multi-Pin Connectors
KTK-Style Connectors
Rotatables
Wet Stab Connectors
Contact Blocks
Boot Kits

Wet Stab Connectors

The Wet Stab connector is designed to perform in harsh environments with water or moisture while protecting the integrity of the electrical signal. This connector is wet mateable as it can be mated while submerged in any environment containing water or any conductive fluid. Once fully mated, the connector would be ready for energization or constant electrical power.

Standard Wet Stab Connectors

Below are a sample of the most common wet stab connectors available and currently in stock. Greene Tweed has an expansive catalog of standard wet stab connector offerings not listed below, as well as custom connectors to fit any application. Compensated pressure refers to an equalized or non-differential pressure.

PART NO.	DIA (in.)	LENGTH (in.)	MAX TEMP (°F)	MAX PRESSURE (ksi)	NO. OF CONTACTS	TERMINATIONS				ARLON® MATERIAL	MATES WITH
ECWS-081059L2-0000	1.059	13.366	375	20	8	#20	PIN	#20	SKT	2000	ECWS-081620L2-0000
ECWS-081620L2-0000	1.620	10.014	375	20, compensated	8	#20	PIN	#20	PIN	1000	ECWS-081059L2-0000
ECWS-031059L2-0000	1.059	8.291	375	20	3	#20	PIN	#20	SKT	2000	ECWS-031620L2-0000
ECWS-031620L2-0000	1.620	4.939	375	20, compensated	3	#20	PIN	#20	PIN	1000	ECWS-031059L2-0000
ECWS-081059L2-0001	1.059	13.366	375	20	8	#20	PIN	#20	SKT	2000	ECWS-081620L2-0000
ECWS-081620L2-0001	1.620	10.014	375	20, compensated	8	#20	PIN	#20	PIN	1000	ECWS-081059L2-0000
ECWS-031059L2-0001	1.059	8.291	375	20	3	#20	PIN	#20	SKT	2000	ECWS-031620L2-0000
ECWS-031620L2-0001	1.620/.998	4.939	375	20, compensated	3	#20	PIN	#20	PIN	1000	ECWS-031059L2-0000
ECSP-010560L2-0001	.548/.200	3.600	400	20	1	#16	PIN	#16	PIN	2000	ECSP-010560L2-0002
ECSP-010560L2-0002	.548	3.750	400	20	1	#16	PIN	#16	PIN	2000	ECSP-010560L2-0001
*ECWS-010548L2-0001	.548	4.553	400	20	1	#16	PIN	#16	PIN	2000	ECWS-010548L2-0002
*ECWS-010548L2-0002	.548/.200	4.239	400	20	1	#16	PIN	#16	PIN	2001	ECWS-010548L2-0001
*ECWS-010548L4-0001	.548	4.100	400	30	1	#16	PIN	#16	PIN	2000	ECWS-010548L4-0001
*ECWS-010548L4-0002	.548/.200	4.239	400	30	1	#16	PIN	#16	PIN	2001	ECWS-010548L4-0002

*Denotes a flexible standard wet-mate connector. The flexible mating feature allows for misalignment between male and female wet-mate connectors when installed or in mounting detail.

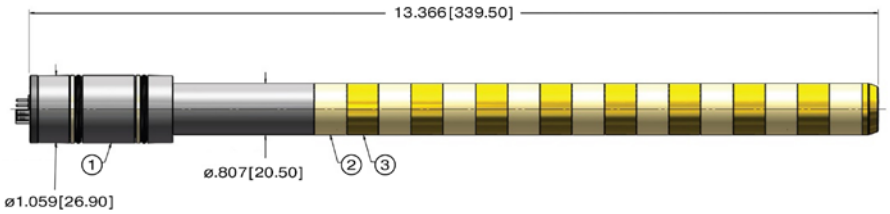

ECWS-081059L2-0000	
ITEM NO.	DESCRIPTION
1	Body
2	Contact Block
3	Insulator

Single-Pin
Perforating Gun Tool Connectors
Coax
Multi-Pin Connectors
KTK-Style Connectors
Rotatables
Wet Stab Connectors
Contact Blocks
Boot Kits

Wet Stab Connectors

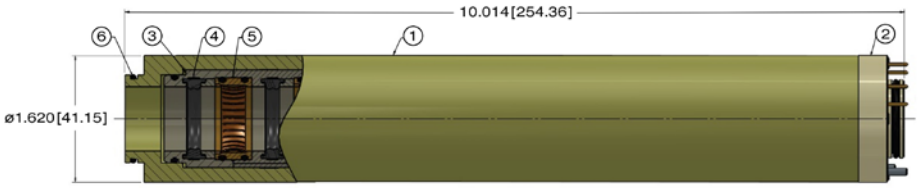

ECWS-081620L2-0000	
ITEM NO.	**DESCRIPTION**
1	Body
2	Connector
3	Insulator
4	Inner Seal
5	Contact
6	Outer Seal

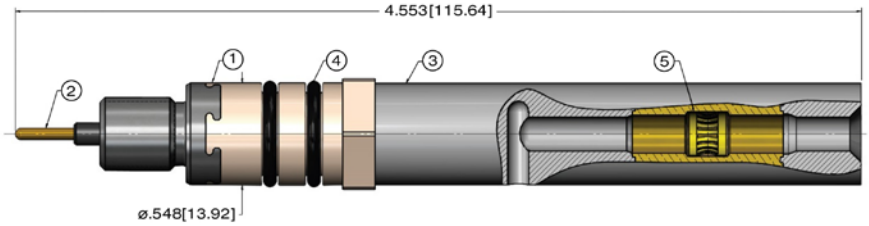

ECWS-010548L2-0001	
ITEM NO.	**DESCRIPTION**
1	Body
2	Contact
3	Elastomeric Boot
4	Seal
5	Retention Feature

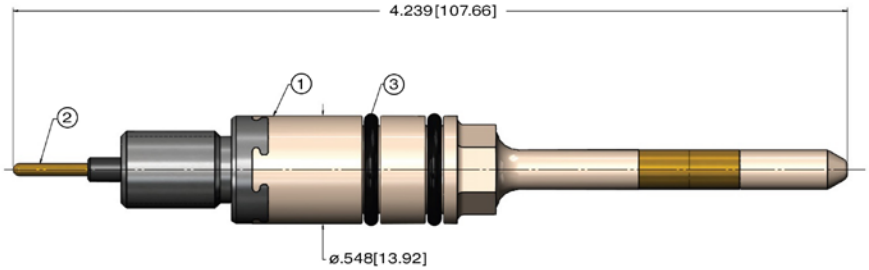

ECWS-010548L2-0002	
ITEM NO.	**DESCRIPTION**
1	Body
2	Contact
3	Seal

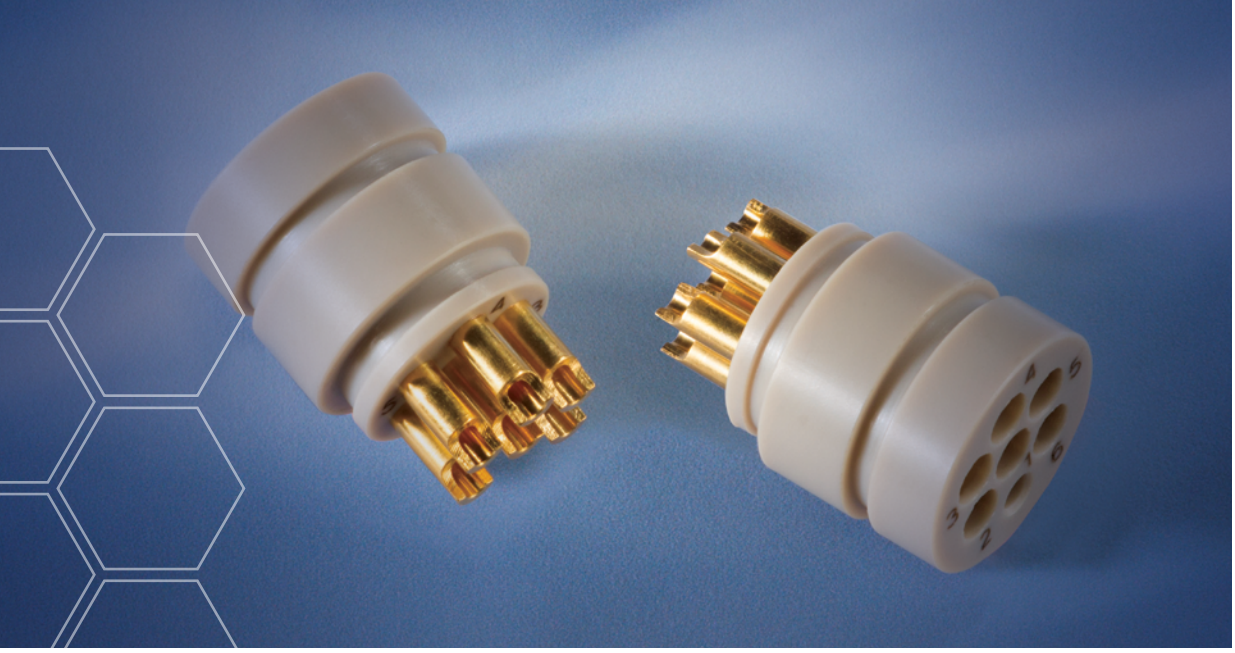

Single-Pin
Perforating Gun Tool Connectors
Coax
Multi-Pin Connectors
KTK-Style Connectors
Rotatables
Wet Stab Connectors
Contact Blocks
Boot Kits

Contact Blocks

Contact blocks are often required as part of the Seal-Connect® connection system and can be custom-designed to match existing connector configurations. Contact blocks are available in male and female versions and single-pin, coaxial, and multi-pin configurations. They are also available with pin number identification, removable contacts, moisture barrier seals, or booted arrangements.

Standard Contact Blocks

Below are a sample of the most common contact blocks available and currently in stock. Greene Tweed has an expansive catalog of standard contact block offerings not listed below, as well as custom contact blocks to fit any application.

PART NO.	DIA (in.)	LENGTH (in.)	MAX TEMPERATURE (°F)	NO. OF CONTACTS	TERMINATIONS				ARLON® MATERIAL	MATES WITH
ECCB-030370L0-0001	0.370	.625	200	3	#20	SKT	#24	CUP	1000	ECMP-030373L2-0002
ECCB-050410L0-0001	0.410	0.587	350	5	#16	SKT	#24	CUP	1000	ECMP-050498L3-0001
ECCB-060498L0-0002	0.498	0.699	400	6	#16	SKT	#22	CUP	1000	ECMP-060498L3-0002
ECCB-080498L0-0001	0.498	0.49	350	8	#18	SKT	#24	CUP	1000	ECMP-080498L2-0001
ECCB-060525L0-0001	0.525	0.515	400	6	#16	SKT	#20	CUP	1000	ECMP-060498L3-0001
ECCB-120688L0-0001	0.688	0.955	400	12	#18	SKT	#20	CUP	1000	ECMP-120685L3-0001

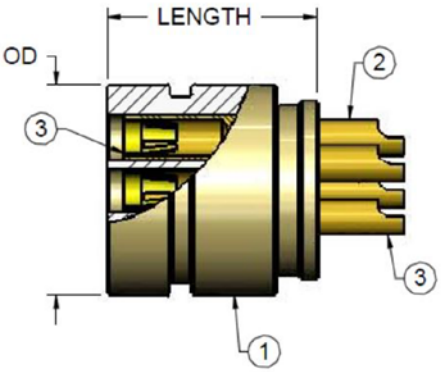

ITEM NO.	DESCRIPTION
1	Body
2	Contact
3	Termination

Boot Kits

Seal-Connect® electrical connectors often require an elastomeric connector boot to seal against pressure and conductive fluids. Connector boots are available in various styles to allow interchangeability with existing connector systems or the exclusive use of a Seal-Connect® system. We offer single-pin and multi-pin boots and can create assemblies to suit specific needs. Boot designs leverage Greene Tweed's non-conductive grades of Chemraz® FFKM and Fusion™ FKM elastomers, some of which are qualified under ISO 23936-2 and NORSOK M-710 standards for RGD resistance.

Standard Boot Kits

Below are a sample of the most common boot kits available and currently in stock. Greene Tweed has an expansive catalog of standard boot kit offerings, not listed below as well as custom boot kits to fit any application.

PART NO.	OD (in.)	LENGTH (in.)	MAX TEMPERATURE (°F)	MAX PRESSURE (ksi)	NO. OF CONTACTS	TERMINATIONS				KEY MATERIALS	MATES WITH
ECKT-010250L3-0001	0.250	1.270	400	25	1	#16	SKT	#20-#24	CMP	Fusion™ 755	ECSP-010233H3-0001
											ECSP-010233L3-0001
ECKT-010310L2-0001	0.310	1.750	400	20	1	#16	SKT	#20-#24	CMP	Fusion™ 755 Arlon® 2000	ECSP-010310L2-0001
											ECSP-010310L2-0002
											ECSP-010310L4-0001

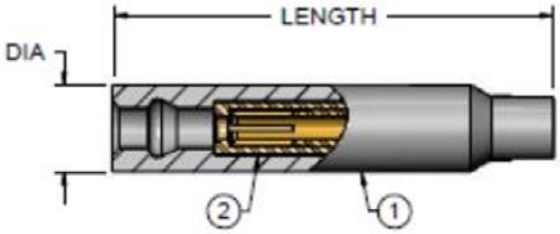

ITEM NO.	DESCRIPTION
1	Body
2	Contact

Custom Connectors

When a standard design falls short of meeting the specifications of an extreme application, Greene Tweed's industry-experienced design and application engineers collaborate to meet the challenge with their deep understanding of materials, equipment, and customer requirements. We evaluate and offer solutions to critical industry challenges such as HPHT and shock and vibration through the innovative use of Greene Tweed's best-in-class materials portfolio. Our in-house design capabilities include 3D modeling, rapid prototyping, and finite element analysis (FEA), including thermal-electrical analysis; dynamic, thermal, and thermo-mechanical analysis; and material flow modeling.

The Power of the Portfolio

The diverse portfolio Greene Tweed has developed over the years makes it possible to provide reliable electrical connection technology for applications across a range of temperatures and pressures. These connectors ensure reliable communication and power in operating conditions to 232°C (450°F) and 35,000 psi. Greene Tweed's engineering and materials science expertise are behind our diverse Seal-Connect® portfolio.

While Greene Tweed does keep an extensive inventory of Seal-Connect® drop-in parts available, we specialize in in-house design, prototyping, testing, and manufacturing services for custom solutions to meet any application requirement. We understand our customers' problems and our experienced design and field application engineers can work with you to recommend and provide solutions to your problems.

Contact Greene Tweed's sales team to order any standard or customized Seal-Connect® product in our extensive portfolio.

gtweed.com/contact-us | +1 281.765.4500

WHERE WE PLAY

Global Presence, Local Service. With nearly 2000 employees across 11 countries, Greene Tweed offers material, design, engineering, and manufacturing expertise worldwide, collaborating with customers to meet their critical challenges through the development of custom-designed, leading-edge components.

SEAL-CONNECT ELECTRICAL CATALOG

Greene, Tweed & Co.
1930 Rankin Road
Houston, TX 77073 USA
Tel: +1.281.765.4500
Fax: +1.281.821.2696
Toll-free: 1.800.927.3301
gtweed.com

Statements and recommendations in this publication are based on our experience and knowledge of typical applications of this product and shall not constitute a guarantee of performance nor modify or alter our standard warranty applicable to such products.

© 2023, Greene, Tweed all rights reserved. All trademarks are property of their respective owners.

6/23-GT BR-US-EN-018